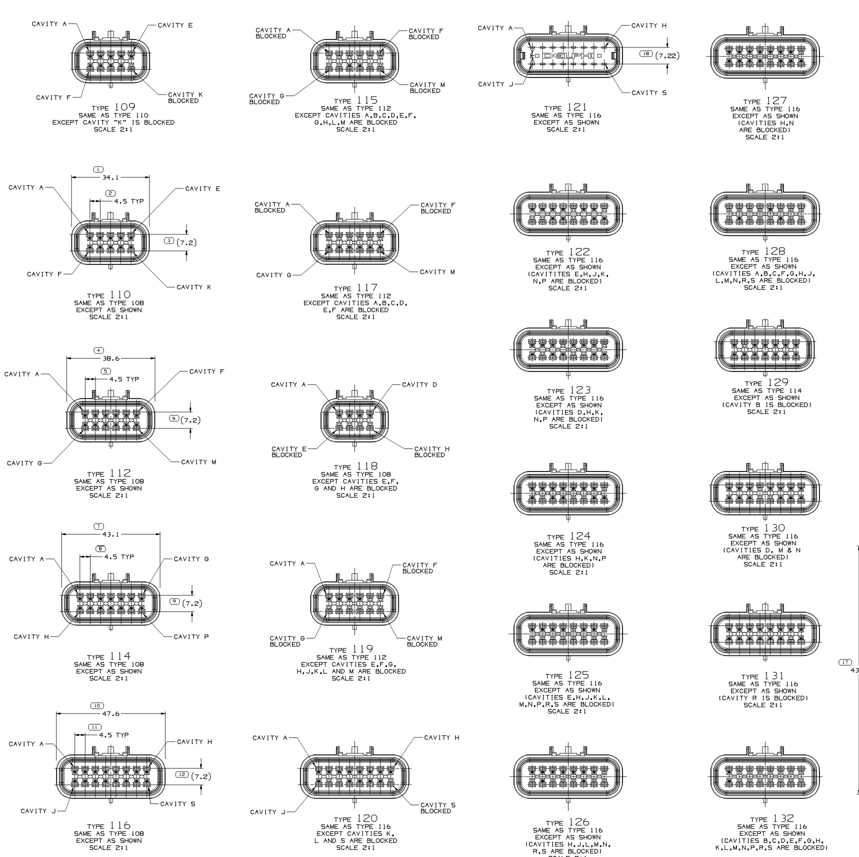

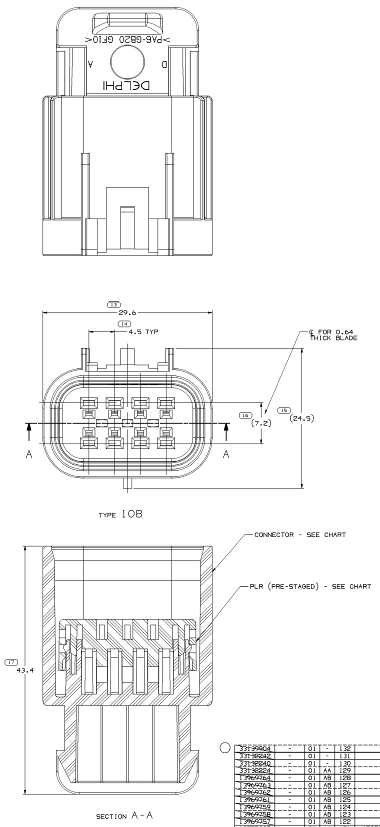

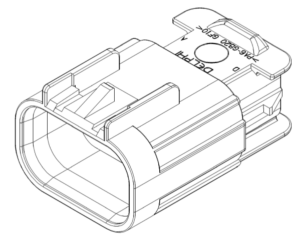

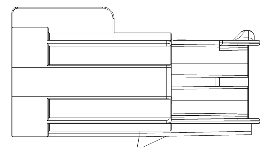

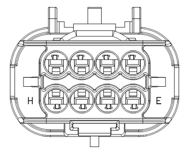

SYMBOL DEFINITION			MISSING SYMBOLS
A DIMENSION WITHOUT AN INSPECTION REPORT SYMBOL ⬭ DOES NOT REQUIRE INSPECTION. IT MAY BE CONTROLLED ON THE INDIVIDUAL COMPONENT DRAWING.	TOTAL NO OF INSPECTIONS REQUIRED	18	NO MISSING SYMBOL NUMBER
	LAST NO. USED	18	

DATE	STG	REV	N/P	CHG	ZONE	REVISION HISTORY	AUTH	DR	APVD 1	APVD 2
12MR02	-	03	-	-		CLEARED REVISION COLUMN, ALL PARTS - REDRAWN TO NEW FORMAT, & ADDED TPA COLUMN	222112	LMB	LMB	CD
10JN02	-	04	-	-		ADDED TYPE COLUMN	224421	LMB	LMB	CD
08AU02	R	05	-	-		15444071 - RELEASED	228754	AMG	AMG	RP
30AP03	-	06	-	-		15465026 & 15465027 - RELEASED	239314	JS	JS	CD
02NO03	R	07	-	-		ALL PARTS - REVISED NOTE #2	248208	MAC	MAC	MC
12MR04	R	08	-	-		15489985, 15489987 & 15489989 - RELEASED	252691	CCV	JVM	MC
01AP04	R	09	-	-		15489985, 15489987 & 15489989 - REVISED MATING CONN ASM INFO	253547	JPB	JAA	MC
10AU04	R	10	-	-		15489985, 15489987, 15489989 - OBSOLETE	257407	ADK	ADK	MC
05AP07	R	11	-	-		15326840, 15326847, 15326854, 15326861 & 15326868 - UPDATED PDM ATTRIBUTES	401058	RTV	JVM	PYP
18MY09	R	12	-	-		ALL ACTIVE PARTS - ADDED APPLICATION DATA & APPEARANCE ITEM NOTES, REMOVED TPA & MATING CONN COLUMN IN CHART	408032	HRS	EVV	VMR
24SE09	R	13	-	-		13755339 - RELEASED	408971	JRL	GLG	APR
18NO10	R	14	-	-		"SHT 1 OF 2" WAS "SHT 1 OF 1"	412580	ACR	JAA	VMR
09JL12	R	15	-	-		13969757, 13969758, 13969759, 13969761, 13969762, 13969763 & 13969764 - RELEASED	418787	JAR	JAR	OAF
26MR13	R	16	-	-		13969757-59, 13969761-64 - UPDATED PDM ATTRIBUTES	421841	DCH	JGM	JSM
22AU13	R	17	-	-		ALL PARTS - PSD WAS #13	423570	AMC	GLG	JSM
09JA14	R	18	-	-		33132224, 33132240 & 33132242 - RELEASED	424770	GLG	GLG	JFF
15JA14	R	19	-	-		33132224 - CORRECTED 33132223 INSTEAD OF 33132224	425209	GLG	GLG	JFF
20JA14	R	20	-	-		33139904 - RELEASED	425152	JVR	JVM	HH

NOTES

1. UNLESS OTHERWISE SPECIFIED AND/OR INDICATED:

   DIMENSIONS ARE TO FACE OF VIEW SHOWN AND AUTOMATICALLY ROUNDED BY COMPUTER FOR INSPECTION (SEE MATH MODEL FOR PRECISE DIMENSIONS). FOR ALL OTHER DIMENSIONS NOT SHOWN BUT REQUIRED FOR TOOL BUILD, SEE MATH MODEL FOR PRECISE TOOL PATH DATA.

2. THIS PRODUCT IS NOT CATEGORIZED AS AN APPEARANCE ITEM, MINOR IMPERFECTIONS INCLUDING, BUT NOT LIMITED TO, FLOW MARKS, COLOR BLEMISHES, GATE VESTIGE, AND SOFT FLASH THAT DO NOT AFFECT THE FIT, FORM, OR FUNCTION OF THE PART ARE PERMISSIBLE PER DPNP-4.7-CS-01.

3. THIS CONNECTION MEETS OR EXCEEDS SAE/ USCAR-2 AUGUST 1997, SECTION 5.3.1.2, TERMINAL DISENGAGE CRITERIA WITH THE APPLICATION OF A TERMINAL POSITION ASSURANCE (TPA) SECONDARY LOCK. (SEE CHART BELOW FOR APPROPRIATE TPA).

4. FOR APPLICATION DATA SEE THE INDIVIDUAL APPLICATION DRAWINGS.

PART NO	ID	REV	N/P	TYPE	CONNECTOR	PLR	BLOCKED CAVITY
33139904	-	01	-	132	33139900	15326865	B,C,D,E,F,G,H,K,L,M,N,P,R,S
33132242	-	01	-	131	33132241	15326865 / ID406242	R
33132240	-	01	-	130	33132239	15326865 / ID406242	D,M,N
33132224	-	01	AA	129	33132223	15326858 / ID406235	B
13969764	-	01	AB	128	13960618	15326865	A,B,C,D,F,G,H,J,L,M,N,R,S
13969763	-	01	AB	127	13960617	15326865	H,N
13969762	-	01	AB	126	13960616	15326865	H,J,L,M,N,R,S
13969761	-	01	AB	125	13960615	15326865	E,H,J,K,L,M,N,P,R,S
13969759	-	01	AB	124	13960614	15326865	H,K,N,P
13969758	-	01	AB	123	13960613	15326865	D,H,K,N,P
13969757	-	01	AB	122	13960611	15326865	E,H,J,K,N,P
13755339	-	01	AA	121	15326867 / ID406246	15423410	-
15489989	-	01	AC	120	15489988	15326865 / ID406242	K,L,S
15489987	-	01	AC	119	15489986	15326851 / ID406229	E,F,G,H,J,K,L,M
15489985	-	01	AC	118	15489984	15326837 / ID406217	E,F,G,H
15465027	-	01	AC	117	15465029	15326851 / ID406229	A,B,C,D,E,F
15465026	-	01	AC	115	15465028	15326851 / ID406229	A,B,C,D,E,F,G,H,L,M
15444071	-	01	AC	109	15439106	15326844 / ID406223	K
15326868	406247	A11	-	116	15326867 / ID406246	15326865 / ID406242	-
15326861	406240	A10	-	114	15326860 / ID406239	15326858 / ID406235	-
15326854	406233	A10	-	112	15326853 / ID406232	15326851 / ID406229	-
15326847	406227	A10	-	110	15326846 / ID406226	15326844 / ID406223	-
15326840	406221	A10	-	108	15326839 / ID406220	15326837 / ID406217	-

A LINE DRAWN THROUGH A PART NUMBER INDICATES THAT PHYSICAL PARTS ARE NOT AVAILABLE FOR ORDERING.

PART NUMBERS THAT DO NOT HAVE A LINE PRESENT INDICATE THAT PHYSICAL PARTS ARE AVAILABLE FOR ORDERING.

CONTACT DELPHI SALES TO ASSURE AVAILABILITY OF PARTS.

DWG TYPE: PART DRAWING

STYLE

VOLUME (CM³) | DISTR CODE: D

UNLESS OTHERWISE SPECIFIED

THIS DOCUMENT IS IN ACCORDANCE WITH ASME Y14.5M-1994 AS AMENDED BY THE GM GLOBAL DIMENSIONING AND TOLERANCING ADDENDUM - 1997. ALL GEOMETRIC TOLERANCES AND RELATED DATUMS APPLY RFS. RULE #1(PERFECT FORM AT MMC) DOES NOT APPLY WHEN RELATIONSHIP BETWEEN FEATURES IS ESTABLISHED BY ORIENTATION OR LOCATION TOLERANCES. SEPARATE POSITION CALLOUTS MAY BE GAGED SEPARATELY, REGARDLESS OF DATUM REFERENCE.

ALL DIMENSIONS ARE IN MILLIMETERS

REFERENCE

THIRD ANGLE PROJECTION

DO NOT SCALE

USE MATH DATA

CAD NX

DELPHI

DELPHI PACKARD ELECTRICAL/ELECTRONIC ARCHITECTURE

WARREN, OH

COPYRIGHT 1996 DELPHI CORPORATION AND/OR ITS AFFILIATES. ALL RIGHTS RESERVED. REVISED 2014

THIS DRAWING IS THE PROPERTY OF DELPHI CORPORATION AND CONTAINS DELPHI CONFIDENTIAL INFORMATION. THE REPRODUCTION, DISTRIBUTION AND UTILIZATION OF THIS DOCUMENT OR ITS RELATED CAD MATH DATA, AS WELL AS COMMUNICATION OF ANY CONTENT TO OTHERS, WITHOUT EXPRESS AUTHORIZATION, IS PROHIBITED.

		DATE
DR		
APVD1	B. NAGY	23JN96
APVD2	M. MCCALL	17JL97
APVD3	M CHUPAK	25JL97
APVD4		
APVD5		

SUBSTANCES OF CONCERN AND RECYCLED CONTENT PER DELPHI 10949001

MATERIAL: SEE DRAWING

DRAWING NAME: TAXI ASM CONN M GT 150 SLD

DRAWING NUMBER: 15326978

SIZE	SCALE	FRAME NO	SHEET NO	STG	REV	N/P
A1x3	5:1	1 OF 2	1 OF 2	R	20	-

DRAWING NUMBER: 15326978

SIZE	SCALE	FRAME NO	SHEET NO	STG	REV	N/P
A1x3	5:1	2 OF 2	1 OF 2	R	20	-

15326978