Copyright FCI

FCIconnect.com

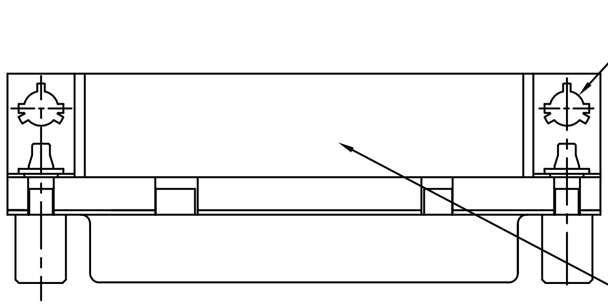

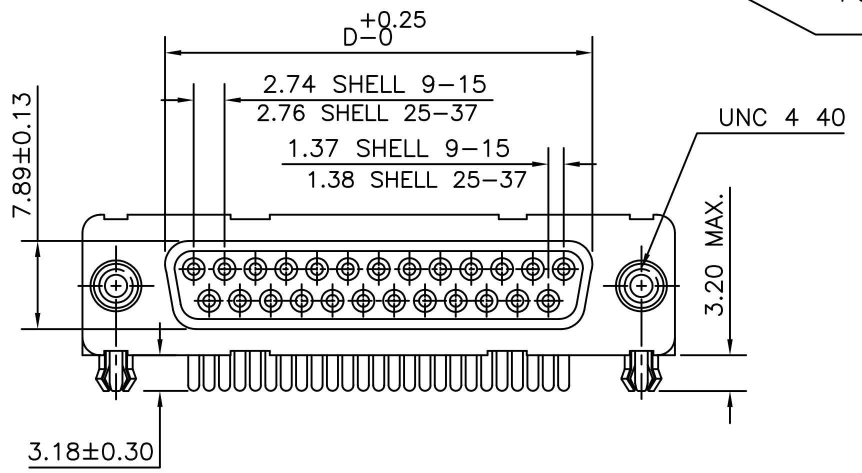

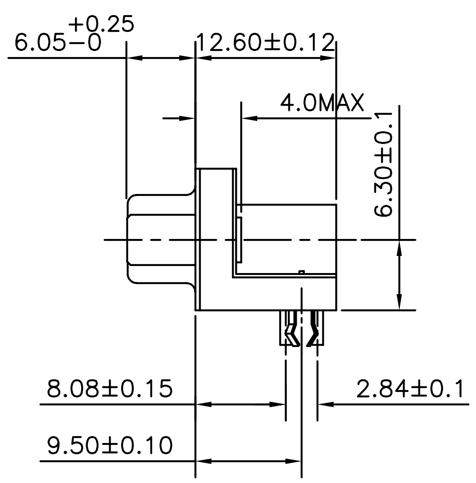

37	69.32	63.50	55.68	54.71	49.68
25	53.03	47.04	39.12	38.25	33.12
15	39.14	33.32	25.18	24.54	19.18
09	30.81	24.99	16.96	16.21	10.96
SHELL	A	B	C	D	E

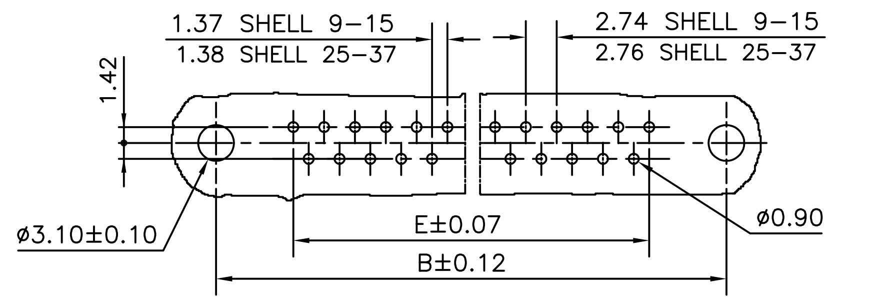

PCB DRILLING DETAILS

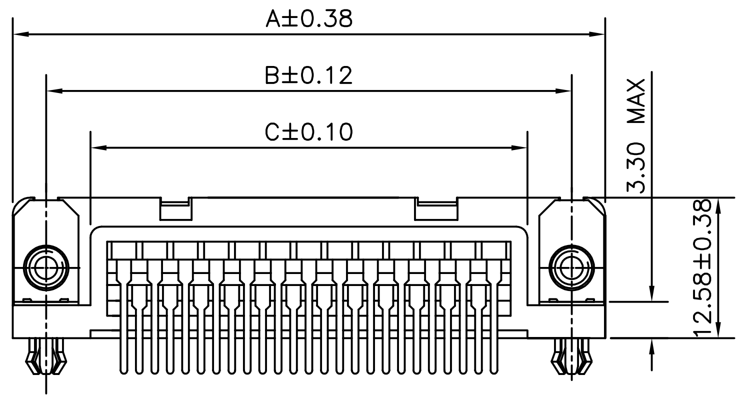

TECHNICAL SPECIFICATIONS

MATERIAL

SHELL : STEEL TIN/Zinc Cr 3 PLATED.

INSULATORS : SELF EXTINGUISHING BLACK POLYESTER UL CLASS 94V0
THE HOUSING WILL WITHSTAND EXPOSURE TO 260-265°C
IF WE USE PROTECTIVE ADHESIVE (type Kapton or Teflon)
OR PROTECTIVE METALLIC DEVICE

CONTACTS : COPPER ALLOY

PLATING

ACTIVE ZONE : GOLD OVER NICKEL

TERMINATION ZONE : TIN LEAD OVER NICKEL

FOR LEAD FREE PLATING : 2µMIN.MATTE TIN TOP OVER
1.27µMIN.NICKEL UNDER PLATE(ON TERMINATION ZONE)

METAL BRACKET : BRASS,TIN/Zinc Cr 3 PLATED.

HARPOON : BRASS,TIN PLATED.

SCREW LOCK : BRASS,TIN/Zinc Cr 3 PLATED.

ELECTRICAL DATA

MAX.CURRENT RATING : 5A

TEST VOLTAGE : 1000V

RATED VOLTAGE : 300V

CONTACT RESISTANCE : ≤ 25mΩ

SHELL RESISTANCE : ≤ 5mΩ

INSULATION RESISTANCE : ≥ 5000MΩ

ENVIRONMENTAL CHARACTERISTICS.

OPERATING TEMPERATURE RANGE : -55°C +125°C

MECHANICAL CHARACTERISTICS

MATING/UNMATING CYCLES (MIN) : 200 (FLASH Au); 500 (0.76µ Au)

INSERTION/EXTRACTION FORCE PER CONTACT : 5 N Max./ 0.3 N Min.

ORDERING INFORMATION

I D 2 5 S 3 3 E 4 G V 0 0 L F

SERIES

NO.OF CONTACTS
09,15,25 & 37

TYPE OF CONTACTS
S-SOCKET

TYPE OF TERMINATION
33-ANGLED SPILL
PITCH 2.84 USA
FOOT PRINT 8.08 USA

HEIGHT OF TERMINATION
E-3.18 US STANDARD

PLATING
4->FLASH Au+Sn/SnPb
6->0.76µ Au+Sn/SnPb

MOUNTING OPTIONS
GV->HARPOON+F.SCREW LOCK UNC 4 40+METAL BRACKET
PV->FEMALE SCREW LOCK UNC 4 40
GI->HARPOON+F.SCREW LOCK M3+METAL BRACKET

SPECIAL CODE
00->STANDARD

LEAD FREE

"This LF product meets European Union Directives and other country regulations as described in GS-22-008"

The housing will withstand exposure to 260°C peak temperature for 3.5 seconds in a wave solder application with a 1.6mm minimum thick circuit board.

Packaging as per GS-14-920

mat'l. code SEE NOTE 4				surface ISO 1302	tolerance ISO 406 ISO 1101	projection	product family DELTA-D
ltr	ecn no	dr	date	tolerances unless otherwise specified			title DELTA-D A/S FEMALE CONNECTOR (GV VER.) (WITH FEM. SCREW LOCK,HARPOON & METAL BRACKET)
D	I06-0074	GVJ	2006/06/08	angles 0°±1°	linear .00±0.1 .000±.00X	MM scale –	
E	I10-0034	NG	2010-01-30	dr	GEORGE.V.JOSEPH	1998/12/16	dwg no C-DD-0028 sheet 1 of 1 size A3
				engr	GEORGE.V.JOSEPH	1998/12/16	
				chr	NIRMAL.GEORGE	2010-01-30	
				appd	SUDHIR.VARMA	2010-01-30	type Product Customer Drawing
sheet revision	E						
index sheet	1						

form: A3

PDM: Rev:E STATUS:Released Printed: Jan 18, 2011