DIMENSIONS mm (inches)

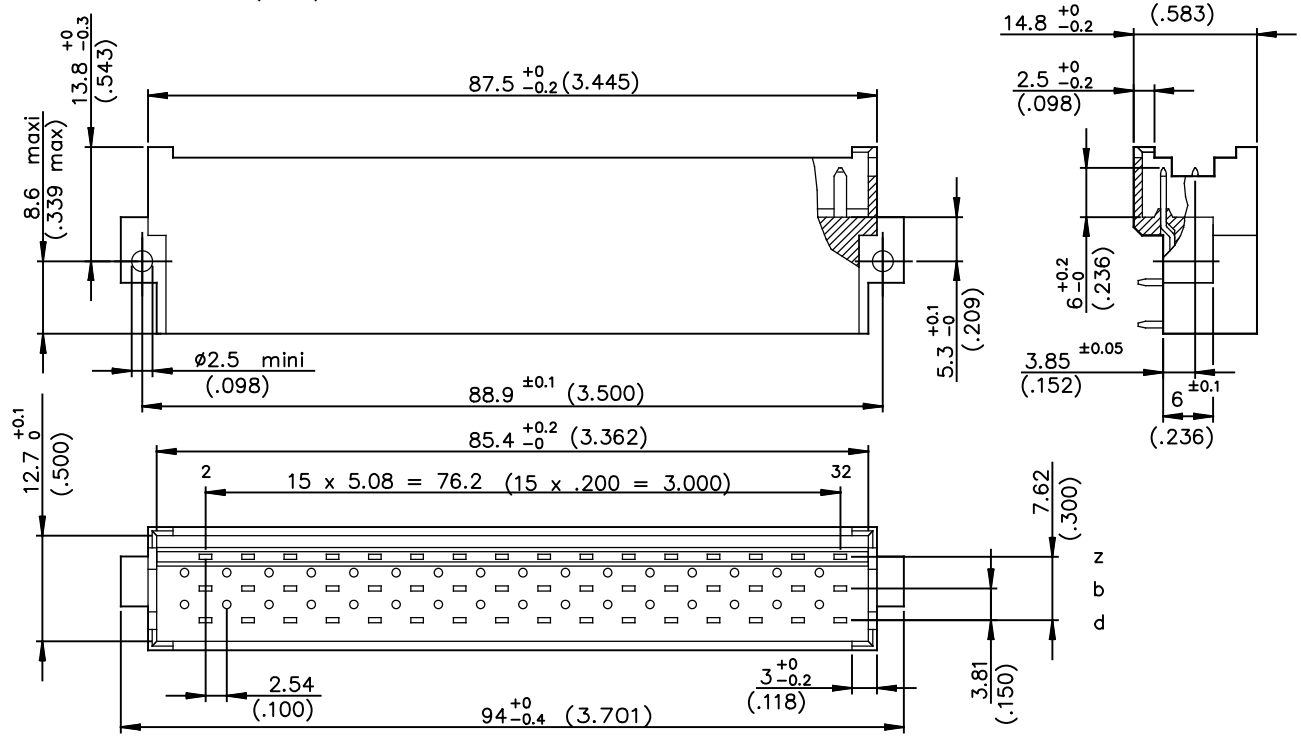

ELECTRICAL DATA

−Current at AMB.	5.5 A at 20° / 4 A at 70°
−Contact resistance	≤15mΩ according to DIN 41640 Teil 4 test 2a
−Insulation resistance	≥10^6 MΩ according to DIN 41640 teil 7 test 3a
−TEST VOLTAGE	according to DIN 41640 teil 21
contact/contact	1550V eff
contact/ground	2500V eff

MECHANICAL DATA

−Insertion force		≤75N
−Mechanical endurance	−class 1	500 matings unmatings according to DIN41640 teil 21
	−class 2	400 matings unmatings according to DIN41640 teil 21
−Material insulator		Polyester UL94V0
−Material contacts		Copper alloy
−Finishing contact surface		Gold over nickel Lead Free
−Finishing termination		Lead−Free
−Schock		≤30mΩ according to DIN 41640 Teil 14 test 6c
−Vibration	−class 1	10−2000Hz/20g according to DIN 41640 Teil 15
	−class 2	10−500Hz/5g according to DIN 41640 Teil 15

ENVIRONMENTAL DATA

−Climatic category	According to DIN 41612
−Corrosion	According to DIN 41612

P.C. CARD DRILLING (scale 1.2)

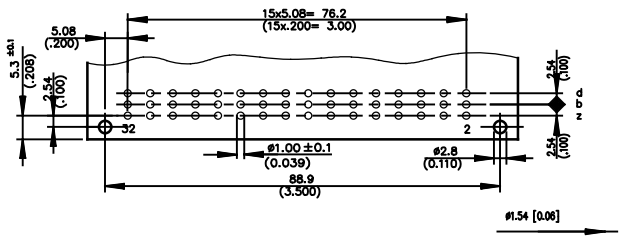

TERMINATION

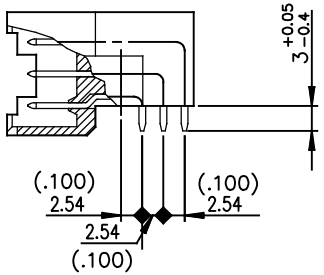

PART NUMBER	5159009	□□	6	□	4	□□	LF

NUMBER OF CONTACTS 32 or 48

TERMINATION
Angled spills — 3
Right angled press−fit — 9

PERFORMANCE CLASS
DIN 41612 class 2 — 5
DIN 41612 class 1 — 9

CONTACT ARRANGEMENT
Row z,b and d with contacts (48) — 111
Row z and d with contacts (32) — 101
Row z and b with contacts (32) — 110

LEAD−FREE

NOTE RoHS INFORMATION

- The "LF" products meet European Union Directives and other country regulations as described in GS−22−008.
- The housing will whistand exposure to 260°C peak temperature for 3.5 seconds in a wave solder application with a 1.6mm minimum thick circuit board.
- For the right angled versions , like the current leaded versions, it's recommended to use high temperature adhesive or metallic device, to protect the nearest plastic part in contact with of the solder wave, to avoid any visual plastic deterioration.

ltr	ecn no	dr	date
C	LS05−0119	ETI	2005/12/13
D	LS06−0022	LGO	2006/02/21
E	LS06−0095	LGO	2006/06/26
F	LS07−0288	LGO	2007/11/19
G	F10−0214	APA	2010/10/01
H	F12−0053	APA	2012/05/07
J	ELX−I−45969	MJA	2022/09/19

dr	PESSON	2006−02−21
engr	PESSON	2006−02−21
chr	M JACOB	2022−09−19
appd	SANOJ	2022−09−19

mat'l. code

surface ISO 1302 — tolerance ISO 406 ISO 1101

tolerances unless otherwise specified: angles 0°±2°; linear .0±.1, .00±.1, .000±.1

projection — mm — scale 1:1

product family: DIN POWER 5159

title: PLUGS MEDIUM POWER 3 ROW STYLE F

dwg no: C01−5159−0037 — sheet 1 of 1 — size A3

type: Product Customer Drawing

sheet index — revision J — sheet 1

form: A3−2016−02−24

PDS: Rev :J STATUS: Released Printed: Nov 29, 2022

© 2016 AFCI